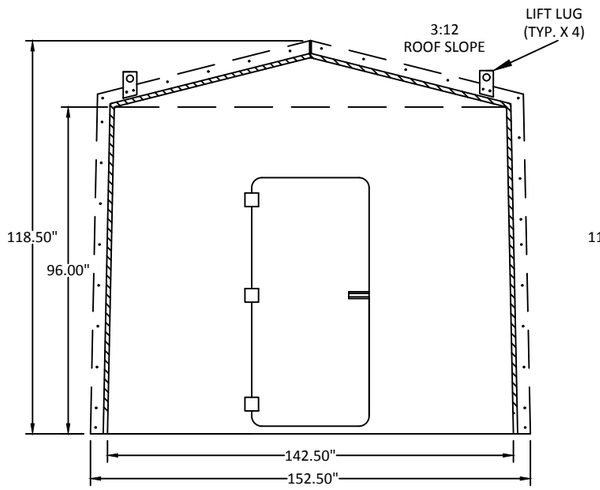

FRONT ELEV.

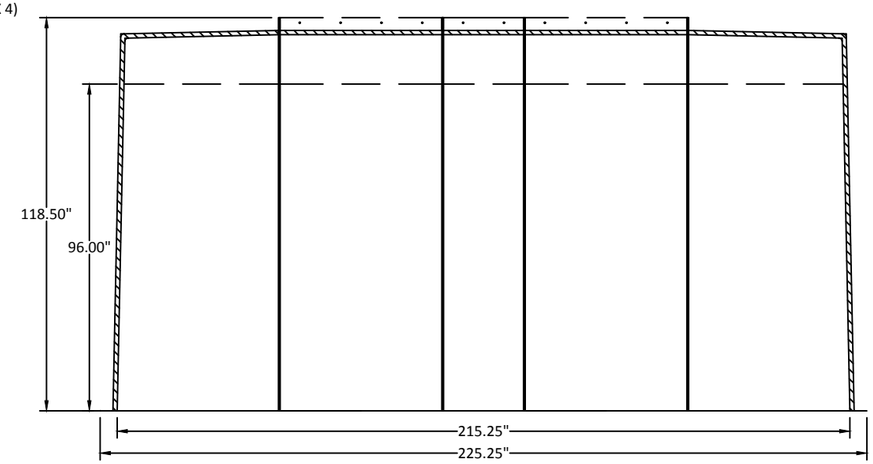

RIGHT ELEV.

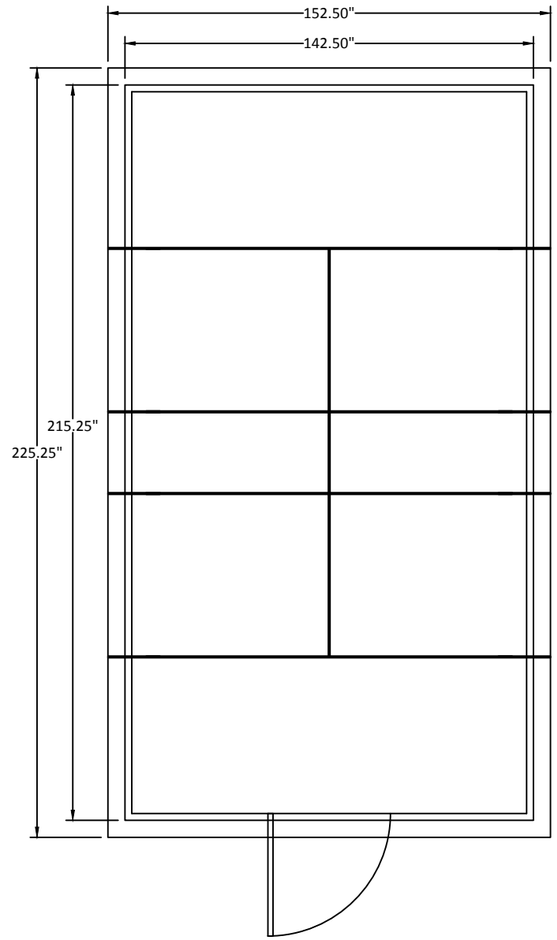

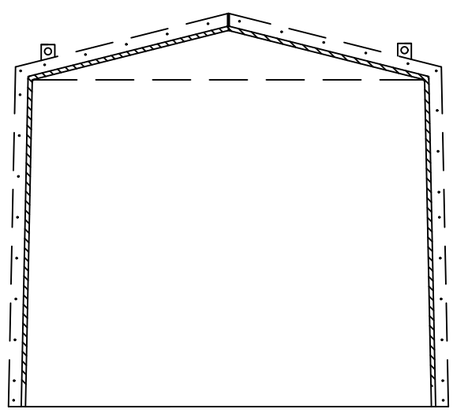

REAR ELEV.

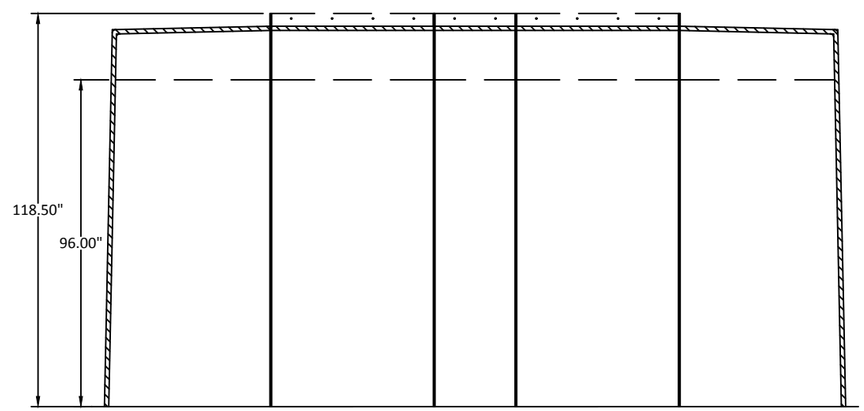

LEFT ELEV.

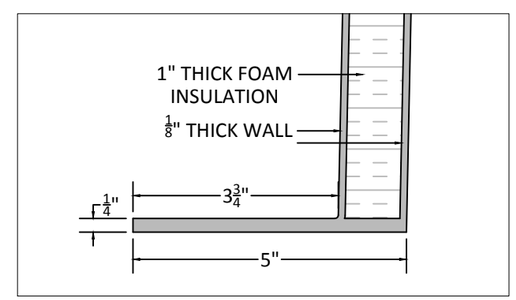

EXTERNAL FLANGE DETAIL

NOTES:
-EXTERIOR COLOR IS TAN
-ALL MEASUREMENTS ARE NOMINAL
-1" THICK FOAM INSULATION IN WALLS
-FIBREGLASS REINFORCED PLASTIC WALLS

\Job Files\2010\Mocoat Drawings\MOCOAT-vector March 2009.jpg

6224 29th Street SE
Calgary, Alberta T2C 1W3
TEL (403) 236-7738
FAX (403) 287-7728

NO.	DATE D	DATE MO.	DATE YR.	REVISION	BY

NO.	DATE D	DATE MO	DATE YR	ISSUED FOR	BY

CLIENT INFO

PO#

MOCOAT MV SERIES
12'W x 18'L x 8'H BUILDING

DRAWN BY MW
REVIEWED BY REVIEWED
SCALE NTS
DATE 2019/04/16

CLIENT APPROVAL
SIGNATURE

DATE

ISSUE FOR APPROVAL
PROJECT NO. ----

MV-12X18X8