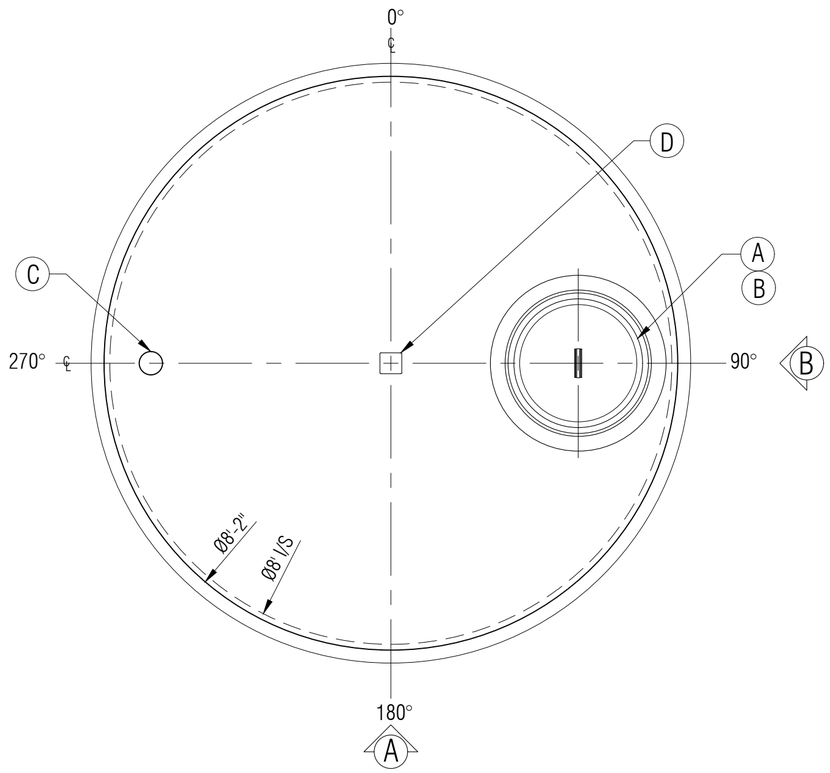

PLAN

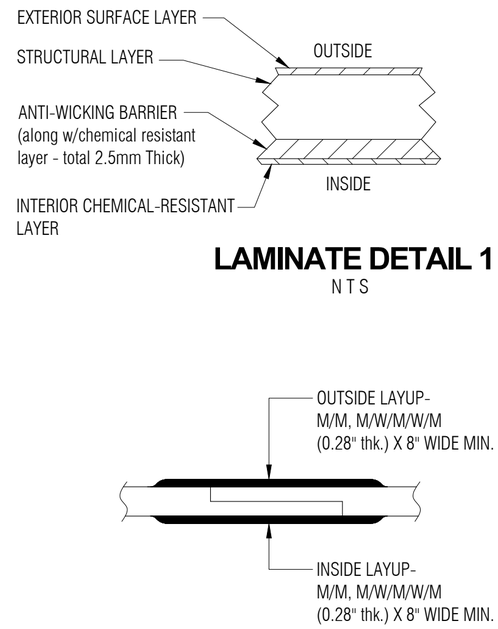

LAMINATE DETAIL 1
N T S

TYPICAL BODY JOINT DETAIL 2
N T S

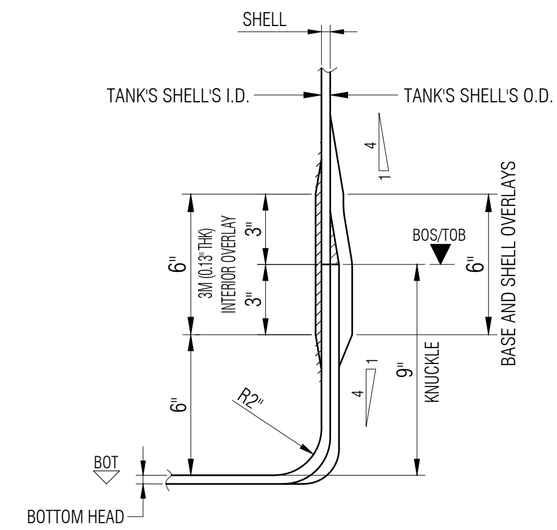

KNUCKLE/BASE/TOP/SHELL DETAIL 3
N T S

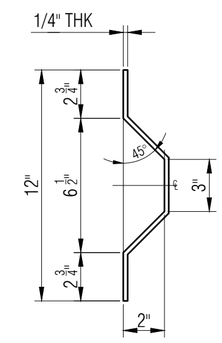

SHELL RIB DETAIL 4
N T S

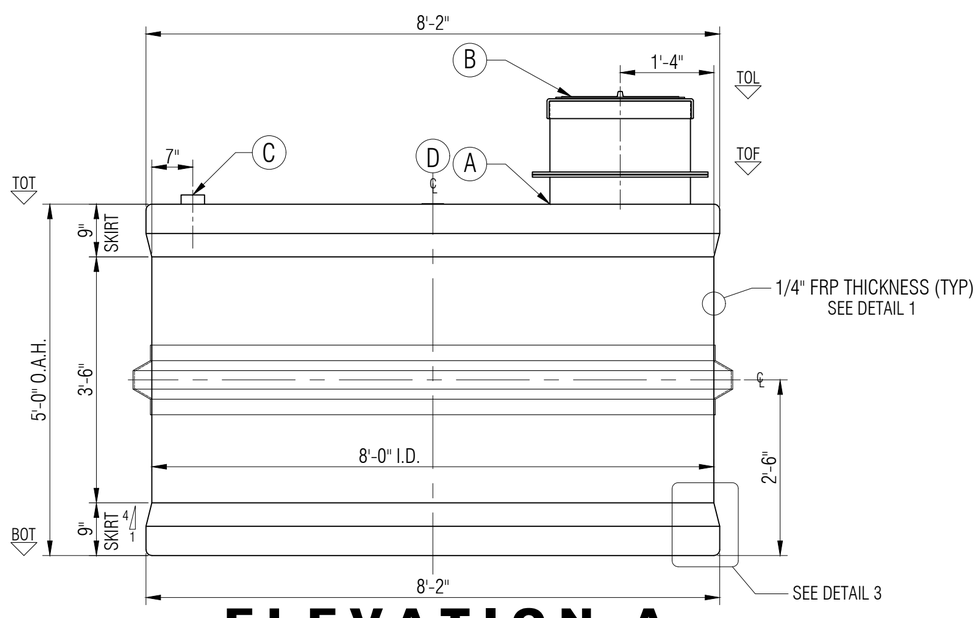

ELEVATION A

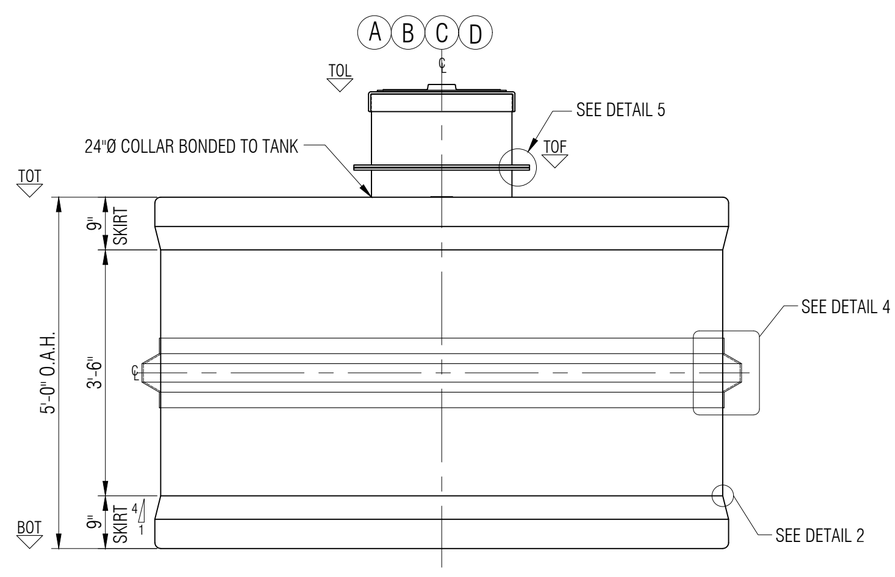

ELEVATION B

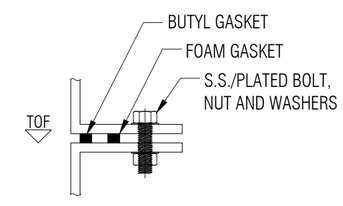

FLANGE TO FLANGE CONNECTION DETAIL 5
N T S

LEGEND:
TOT - TOP OF TANK
TOL - TOP OF LID
TOF - TOP OF FLANGE
BOT - BOTTOM OF TANK
I/S - INSIDE
O.A.H.-OVERALL HEIGHT
I/S - INSIDE
O/S - OUTSIDE
Ø - DIAMETER
° - DEGREE/S
TYP- TYPICAL
℄ - CENTER LINE
NTS - NOT TO SCALE

GENERAL NOTES:
- CSA B66 CERTIFIED FOR SEWAGE.
- ONE PIECE TANK.
- TANK THICKNESS IS 1/4" THK. FROM THE TOP TO THE BASE OF THE TANK.
- DIMENSIONS SHOWN IN FEET INCHES FORMAT OTHERWISE NOTED.
- 1/2" FABRICATION TOLERANCE. DOES NOT APPLY TO LAMINATE THICKNESS.

ITEM#	QTY	PART LIST/DESCRIPTION
A	1	24"Ø MANWAY FRP FLANGE COLLAR
B	1	24"Ø FLAT LID W/ 22"Ø POLY SCREWOUT LID
C	1	4"Ø PVC-DWV COUPLING - INLET
D	1	NAMEPLATE
E		
F		
G		

APPROX. WEIGHT:	476KG (1,050LBS.)
OVERALL CAPACITY:	6,820 L (1,500 IG/1,800 USG)

DRAWN:	ATF
CHECKED:	
DATE:	FEB. 07, 2024
DESIGNED:	
APPROVED:	MPS
MFG:	DS
PM:	GA
SALES:	DG

CLIENT: FRP/MOCOAT FIBERGLASS LTD.
TITLE: **AGS1500-L SEWAGE STORAGE TANK**

FRPMOCOAT FIBERGLASS LTD.

SIZE	DRAWING NUMBER:	REVISION
C	AGS1500-L	0

SCALE	EST#:	SO#:	SHEET
1:20	PO#:	JOB#:	1/1