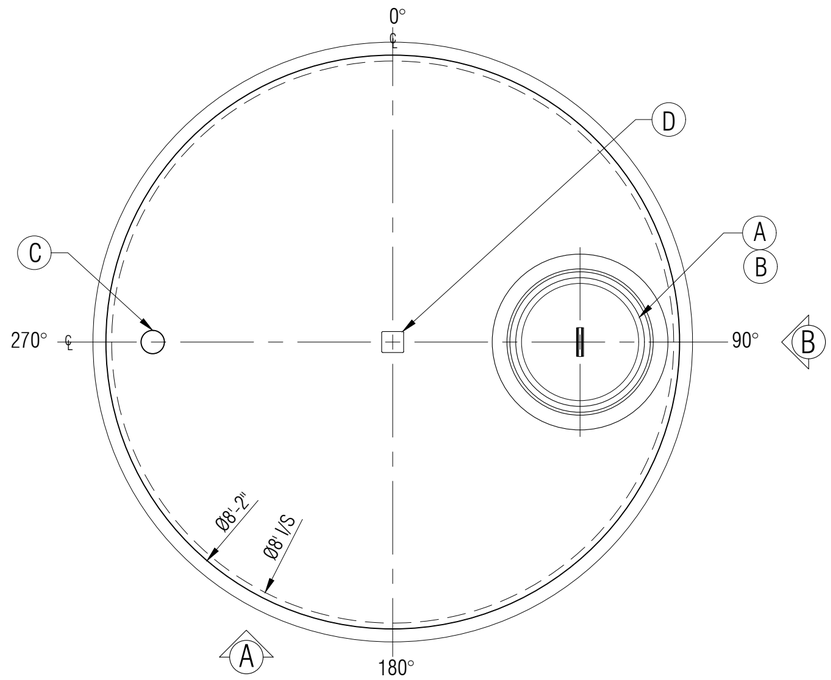

PLAN

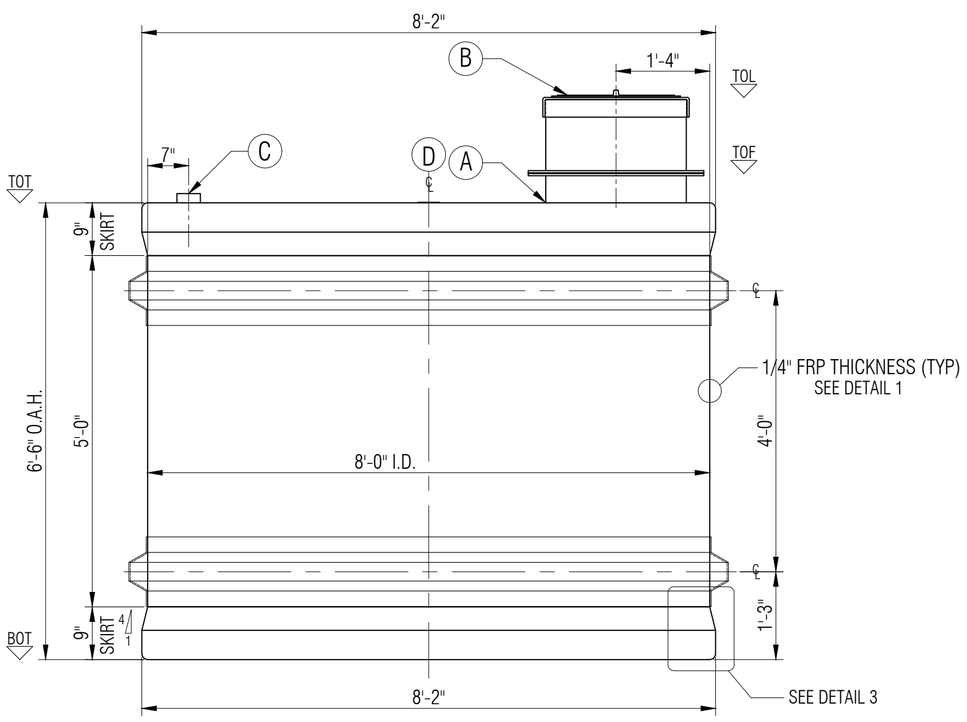

ELEVATION A

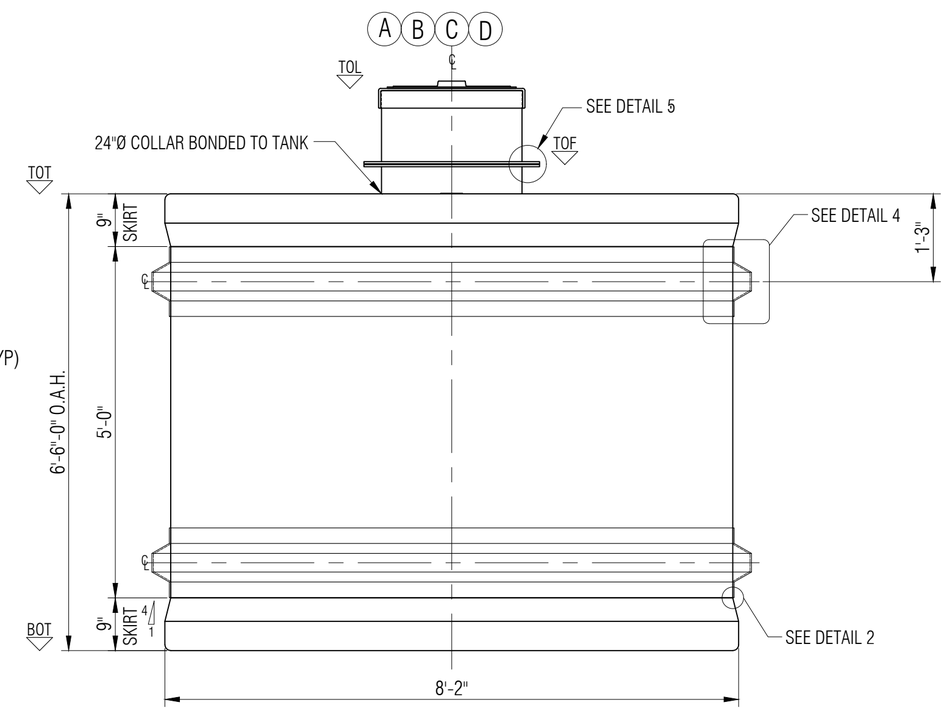

ELEVATION B

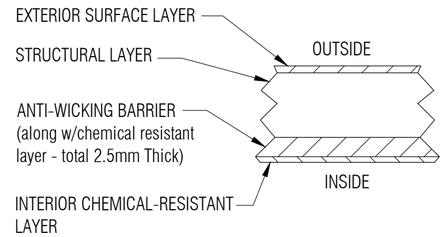

LAMINATE DETAIL 1

N T S

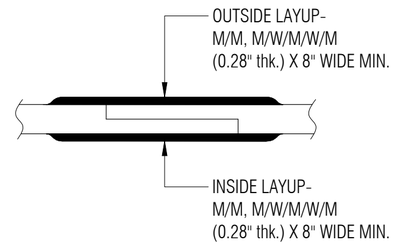

TYPICAL BODY JOINT DETAIL 2

N T S

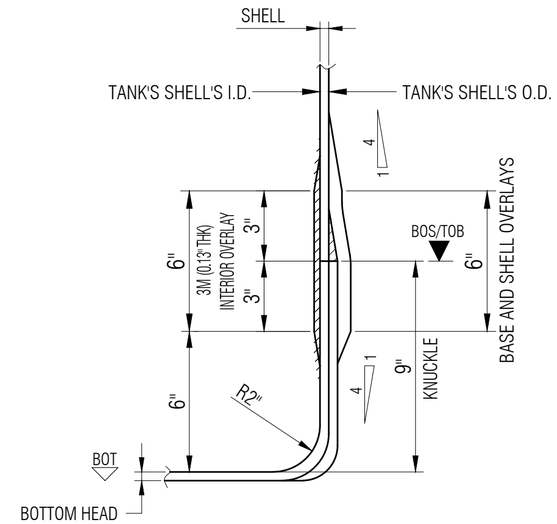

KNUCKLE/BASE/TOP/SHELL DETAIL 3

N T S

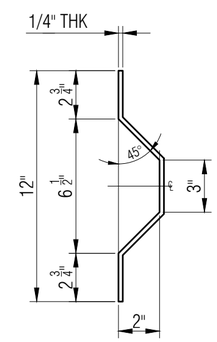

SHELL RIB DETAIL 4

N T S

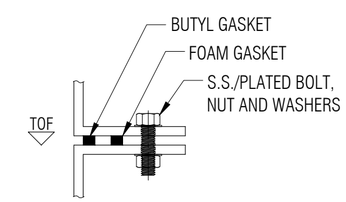

FLANGE TO FLANGE CONNECTION DETAIL 5

N T S

LEGEND:
TOT - TOP OF TANK
TOL - TOP OF LID
TOF - TOP OF FLANGE
BOT - BOTTOM OF TANK
I/S - INSIDE
O.A.H.-OVERALL HEIGHT
I/S - INSIDE
O/S - OUTSIDE
Ø - DIAMETER
° - DEGREE/S
TYP- TYPICAL
℄ - CENTER LINE
NTS - NOT TO SCALE

GENERAL NOTES:
- CSA B66 CERTIFIED FOR SEWAGE.
- ONE PIECE TANK.
- TANK THICKNESS IS 1/4" THK. FROM THE TOP TO THE BASE OF THE TANK.
- DIMENSIONS SHOWN IN FEET INCHES FORMAT OTHERWISE NOTED.
- 1/2" FABRICATION TOLERANCE. DOES NOT APPLY TO LAMINATE THICKNESS.

ITEM#	QTY	PART LIST/DESCRIPTION	APPROX. WEIGHT:	560KG (1,235LBS.)
A	1	24"Ø MANWAY FRP FLANGE COLLAR	OVERALL CAPACITY:	9,092 L (2,000 IG/2,400 USG)
B	1	24"Ø FLAT LID W/ 22"Ø POLY SCREWOUT LID		
C	1	4"Ø PVC-DWV COUPLING - INLET		
D	1	NAMEPLATE		
E				
F				
G				

DRAWN:	ATF
CHECKED:	
DATE:	FEB. 07, 2024
DESIGNED:	
APPROVED:	MPS
MFG:	DS
PM:	GA
SALES:	DG

CLIENT: FRP/MOCOAT FIBERGLASS LTD.

TITLE: **AGS2000-L SEWAGE STORAGE TANK**

FRPMOCOAT FIBERGLASS LTD.

SIZE	DRAWING NUMBER:	REVISION
C	AGS2000-L	0

SCALE	EST#:	SO#:	SHEET
1:20	PO#:	JOB#:	1/1