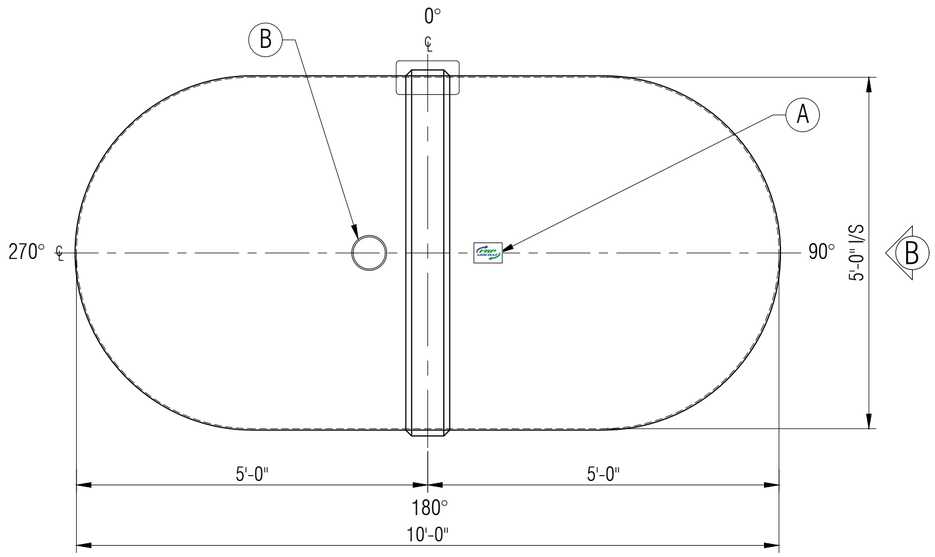

PLAN

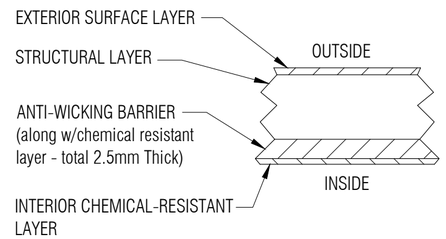

LAMINATE DETAIL 1

N T S

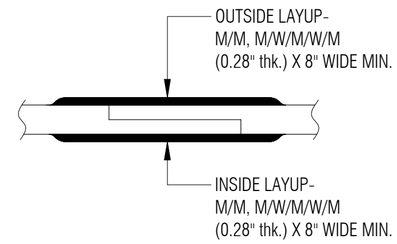

FLANGE TO FLANGE CONNECTION DETAIL 2

N T S

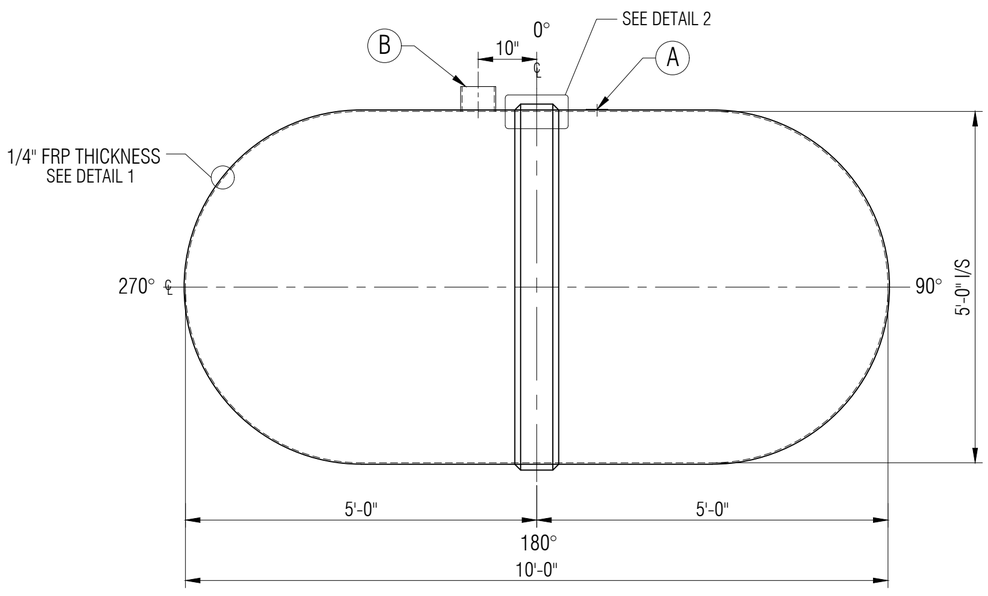

ELEVATION A

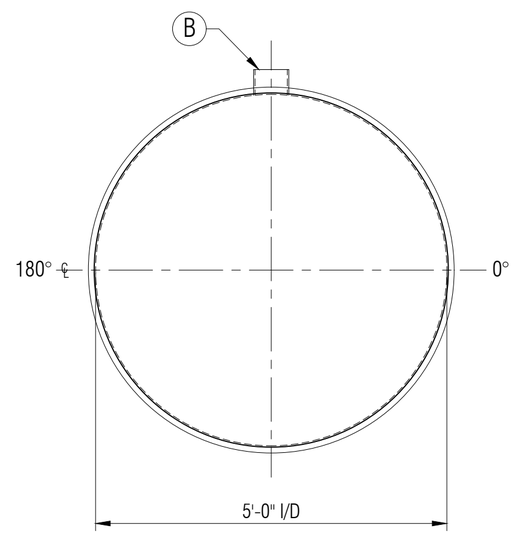

ELEVATION B

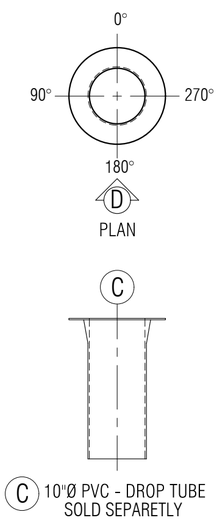

ELEVATION D

GENERAL NOTES:
- CSA B66 CERTIFIED FOR SEWAGE.
- TANK COMES UNASSEMBLED FROM FACTORY.
- 10" Ø DROP TUBE TOILET PACKAGE IS SOLD SEPARATELY.
- DIMENSIONS SHOWN IN FEET INCHES FORMAT OTHERWISE NOTED.
- 1/2" FABRICATION TOLERANCE. DOES NOT APPLY TO LAMINATE THICKNESS.

LEGEND:
TOL - TOP OF LID
TOF - TOP OF FLANGE
BCD - BOLT CENTER DIAMETER
BOT - BOTTOM OF TANK
I/S - INSIDE
O/S - OUTSIDE
Ø - DIAMETER
° - DEGREE/S
TYP- TYPICAL
℄ - CENTER LINE
NTS - NOT TO SCALE

ITEM#	QTY	PART LIST/DESCRIPTION
A	1	NAMEPLATE
B	1	6"Ø COUPLING - VENT
C	1	10"Ø PVC - DROP TUBE (SOLD SEPARATELY)
D		
E		
F		
G		

APPROX. WEIGHT:	238KG (525LBS.)
OVERALL CAPACITY:	1,705 L (375 IG/450 USG)

DRAWN:	ATF
CHECKED:	
DATE:	FEB. 13, 2024
DESIGNED:	
APPROVED:	MPS
MFG:	DS
PM:	GA
SALES:	DG

CLIENT: FRP/MOCOAT FIBERGLASS LTD.

TITLE: **TOIL1000 TOILET TANK**

FRPMOCOAT FIBERGLASS LTD.

SIZE	DRAWING NUMBER:	REVISION
C	TOIL1000	0

SCALE	EST#:	SO#:	SHEET
1:20	PO#:	JOB#:	1/1